VIJAYDEEP™

VZ3.3

Raw material: ck45DIN (Forged Steel)
Hardness: 32-35 HRC
Black Coated

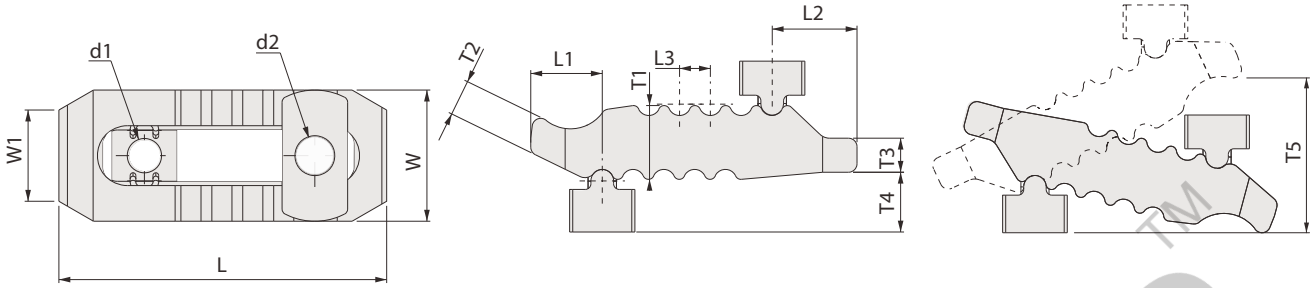

Code	L	L1	L2	L3	W	W1	T1	T2	T3	T4	T5	TSlot	d1	d2	Claming Force (kgf)	Weight (g)	Stock
VZ3.3/ 001	115	25	30	11	44	30	27	12.5	12	21	0-55	10-12-14	**M12**	13	3000	506	•
VZ3.3/ 002	150	35	36	12	55	41	36	18	17	23	0-70	12-14-16-18	**M16**	17	4000	1382	•
VZ3.3/ 003	187	44	44	14	63	30	42	25	20	32.5	0-80	16-18-20-22	**M20**	21	6000	2241	•
VZ3.3/ 004	235	60	47	17	70	30	51	36.5	24	34	0-100	20-22-24-28	**M20**	25	7500	3550	•

✓ - Ex-stock • - Against Order | Ordering Example: Code - Quantity | VZ3.3/ 004- 4 Pcs

VZ3.3/1

Double Sided Clamp with T Bolt

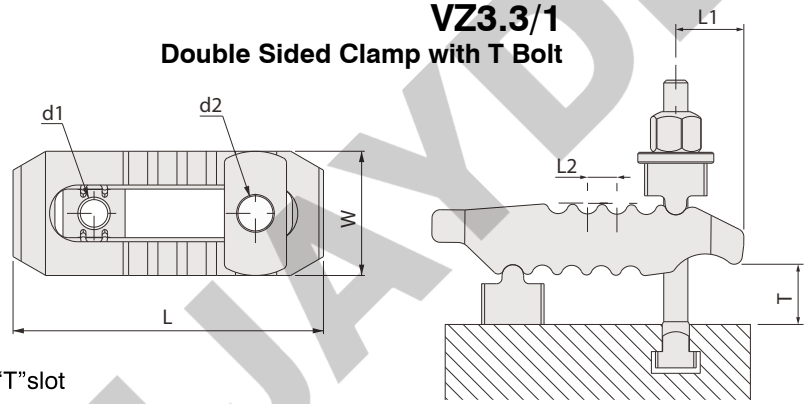

◆Product is suitable DIN650 "T"slot

Code	L	L1	L2	W	T	T-Slot	d1	d2	DIN 787	Claming Force (kgf)	Weight (g)	Stock
VZ3.3/1/ 001	115	25	11	44	0-55	10	M12	13	**M10X10X100**	2500	613	•
VZ3.3/1/ 002	115	25	11	44	0-55	12	M12	13	**M12X12X125**	3000	686	•
VZ3.3/1/ 003	115	25	11	44	0-55	14	M12	13	**M12X14X125**	3000	705	•
VZ3.3/1/ 004	150	35	12	55	0-70	12	M16	17	**M12X12X160**	3500	1591	•
VZ3.3/1/ 005	150	35	12	55	0-70	14	M16	17	**M12X14X160**	3500	1610	•
VZ3.3/1/ 006	150	35	12	55	0-70	16	M16	17	**M16X16X160**	4000	1798	•
VZ3.3/1/ 007	150	35	12	55	0-70	18	M16	17	**M16X18X160**	4000	1818	•
VZ3.3/1/ 008	187	44	14	63	0-80	16	M20	21	**M16X16X200**	5500	2715	•
VZ3.3/1/ 009	187	44	14	63	0-80	18	M20	21	**M16X18X200**	5500	3018	•
VZ3.3/1/ 010	187	44	14	63	0-80	20	M20	21	**M20X20X200**	6000	3018	•
VZ3.3/1/ 011	187	44	14	63	0-80	22	M20	21	**M20X22X200**	6000	3060	•
VZ3.3/1/ 012	235	60	17	70	0-100	20	M20	25	**M20X20X250**	7000	4368	•
VZ3.3/1/ 013	235	60	17	70	0-100	22	M20	25	**M20X22X250**	7000	4410	•
VZ3.3/1/ 014	235	60	17	70	0-100	24	M20	25	**M24X24X250**	7500	4895	•
VZ3.3/1/ 015	235	60	17	70	0-100	28	M20	25	**M24X28X250**	7500	4966	•

✓ - Ex-stock • - Against Order | Ordering Example: Code - Quantity | VZ3.3/1/ 015 - 4 Pcs

VIJAYDEEP™

VIJAYDEEP™

VZ3.3/2

With T Bolt & Support Extension

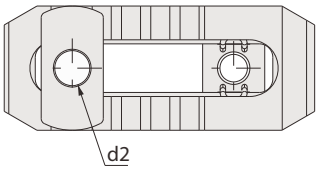

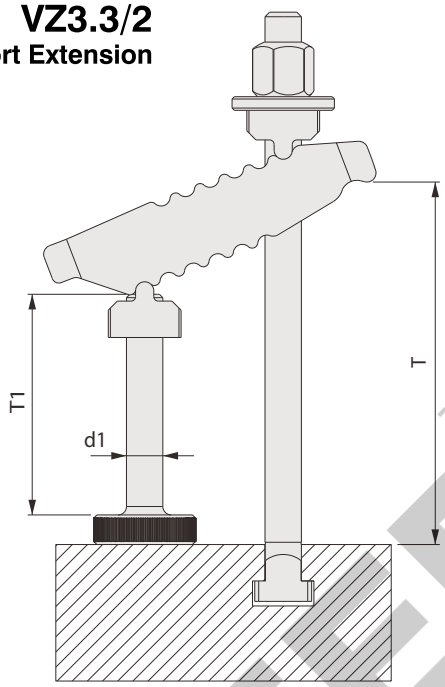

◆Product is suitable DIN650 “T”slot

Code	d1 x T1	d2	T	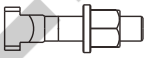 DIN 787	Stock
VZ3.3/2/ 001	M12X50	13	15-31	M10x10x100	•
VZ3.3/2/ 002	M12X50		15-97	M12x12x160	•
VZ3.3/2/ 003	M12X50		15-97	M12x14x160	•
VZ3.3/2/ 004	M16X62	17	18-126	M12x12x200	•
VZ3.3/2/ 005	M16X62		18-126	M12x14x200	•
VZ3.3/2/ 006	M16X62		18-126	M16x16x200	•
VZ3.3/2/ 007	M16X62		18-126	M16x18x200	•
VZ3.3/2/ 008	M16X97		18-120	M12x12x200	•
VZ3.3/2/ 009	M16X97		18-120	M12x14x200	•
VZ3.3/2/ 010	M16X97		39-161	M16x16x250	•
VZ3.3/2/ 011	M16X97		39-161	M16x18x250	•
VZ3.3/2/ 012	M20X62	21	18-129	M16x16x250	•
VZ3.3/2/ 013	M20X62		18-129	M16x18x250	•
VZ3.3/2/ 014	M20X62		18-129	M20x20x250	•
VZ3.3/2/ 015	M20X62		18-129	M20x22x250	•
VZ3.3/2/ 016	M20X97		18-151	M16x16x250	•
VZ3.3/2/ 017	M20X97		18-151	M16x18x250	•
VZ3.3/2/ 018	M20X97		42-184	M20x20x315	•
VZ3.3/2/ 019	M20X97		42-184	M20x22x315	•
VZ3.3/2/ 020	M20X62	25	21-147	M20x20x315	•
VZ3.3/2/ 021	M20X62		21-147	M20x22x315	•
VZ3.3/2/ 022	M20X62		21-147	M24x24x315	•
VZ3.3/2/ 023	M20X62		21-147	M24x28x315	•
VZ3.3/2/ 024	M20X97		21-182	M20x20x315	•
VZ3.3/2/ 025	M20X97		21-182	M20x22x315	•
VZ3.3/2/ 026	M20X97		21-182	M24x24x315	•
VZ3.3/2/ 027	M20X97		21-182	M24x28x315	•

✓ - Ex-stock • - Against Order | Ordering Example: Code - Quantity | Z3.3/2/ 027 - 4 Pcs

VIJAYDEEP™