VIJAYDEEP™

VF5.3
Lifter Base

Item	Material	Qty.
Lifter Rod Holder	SCM440	1
Guide Plate	#500SP(CAC3.4+Gr)	2
Key	S45C	2

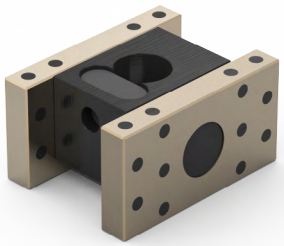

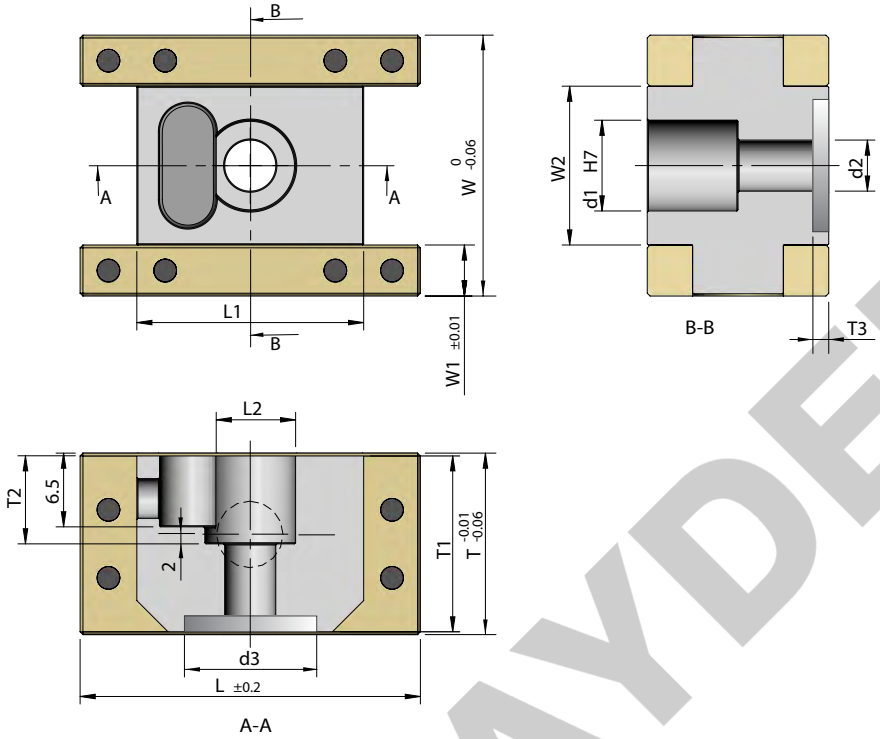

VIJAYDEEP™

VF

Code	d1	d2	d3	L	L1	L2	W	W1	W2	T	T1	T2	T3	Stock
VF5.3/ 8	**8**	5.5	-	30	20	7	23	4.5	14	16	16	10	-	●
VF5.3/ 10	**10**	5.5	-	30	20	9	23	4.5	14	16	16	10	-	●
VF5.3/ 12	**12**	5.5	-	35	25	11	30	6.5	17	20	16	10	-	●
VF5.3/ 16	**16**	9	16	40	29	15	33	6.5	20	20	18	11	3	●
VF5.3/ 20	**20**	11	20	40	34	18	38	6.5	25	24	22	13	5.5	●
VF5.3/ 25	**25**	11	20	45	38	22	45	7	31	26	26	15	5.5	●
VF5.3/ 30	**30**	11	20	55	43	27.5	51	7.5	36	30	30	17	3.5	●
VF5.3/ 35	**35**	13	26	70	48	32.5	60	9	42	34	36	20	4	●
VF5.3/ 40	**40**	13	26	80	53	37.5	67	10	47	38	40	22	4	●

✓- Ex-stock ● - Against Order | Ordering Example: Code - Quantity | VF5.3/ 40 - 10 Pcs