VIJAYDEEP™

VE3.1

DIN-1530

Raw Material:Through Hardened & Ground Steel
Hardness: 50-54 HRC
Recommended for Plastic moulds.
Raw Material: Hot Die Steel (H-11/H-13)
Hardness: Surface Nitrided to 60-62 HRC Core 45-50 HRC
Recommended for high temperature moulds and die casting dies.

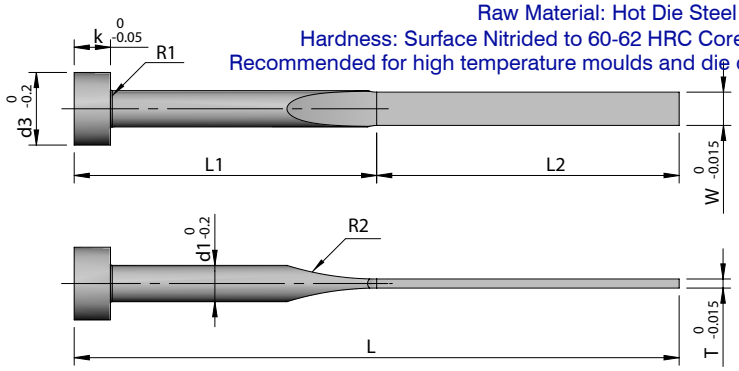

Through Hardened	Stock	Nitrided (HDS)	Stock	d1	d3	k	L	L1	L2	W	T	R1	R2
VE3.1/ 001 - T	●	VE3.1/ 001 - H	●	4	8	3	60	30	30	3.5	1	0.3	5
VE3.1/ 002 - T	●	VE3.1/ 002 - H	●				80	40	40				
VE3.1/ 003 - T	●	VE3.1/ 003 - H	●				100	50	50				
VE3.1/ 004 - T	●	VE3.1/ 004 - H	●	4.2	8	3	60	30	30	3.8	1	0.3	5
VE3.1/ 005 - T	●	VE3.1/ 005 - H	●				80	40	40				
VE3.1/ 006 - T	●	VE3.1/ 006 - H	●				100	50	50				
VE3.1/ 007 - T	●	VE3.1/ 007 - H	●				125	63	62				
VE3.1/ 008 - T	●	VE3.1/ 008 - H	●				160	80	80				
VE3.1/ 009 - T	●	VE3.1/ 009 - H	●	4.2	8	3	80	40	40	3.8	1.2	0.3	5
VE3.1/ 010 - T	●	VE3.1/ 010 - H	●				100	50	50				
VE3.1/ 011 - T	●	VE3.1/ 011 - H	●				125	63	62				
VE3.1/ 012 - T	●	VE3.1/ 012 - H	●				160	80	80				
VE3.1/ 013 - T	●	VE3.1/ 013 - H	●	5	10	3	80	40	40	4.5	1	0.3	5
VE3.1/ 014 - T	●	VE3.1/ 014 - H	●				100	50	50				
VE3.1/ 015 - T	●	VE3.1/ 015 - H	●				125	63	62				
VE3.1/ 016 - T	●	VE3.1/ 016 - H	●				160	80	80				
VE3.1/ 017 - T	●	VE3.1/ 017 - H	●	5	10	3	80	40	40	4.5	1.2	0.3	5
VE3.1/ 018 - T	●	VE3.1/ 018 - H	●				100	50	50				
VE3.1/ 019 - T	●	VE3.1/ 019 - H	●				125	63	62				
VE3.1/ 020 - T	●	VE3.1/ 020 - H	●				160	80	80				
VE3.1/ 021 - T	●	VE3.1/ 021 - H	●	5	10	3	80	40	40	4.5	1.5	0.3	5
VE3.1/ 022 - T	●	VE3.1/ 022 - H	●				100	50	50				
VE3.1/ 023 - T	●	VE3.1/ 023 - H	●				125	63	62				
VE3.1/ 024 - T	●	VE3.1/ 024 - H	●				160	80	80				
VE3.1/ 025 - T	●	VE3.1/ 025 - H	●	6	12	5	80	40	40	5.5	1	0.5	5
VE3.1/ 026 - T	●	VE3.1/ 026 - H	●				100	50	50				
VE3.1/ 027 - T	●	VE3.1/ 027 - H	●				125	63	62				
VE3.1/ 028 - T	●	VE3.1/ 028 - H	●				160	80	80				
VE3.1/ 029 - T	●	VE3.1/ 029 - H	●	6	12	5	80	40	40	5.5	1.2	0.5	5
VE3.1/ 030 - T	●	VE3.1/ 030 - H	●				100	50	50				
VE3.1/ 031 - T	●	VE3.1/ 031 - H	●				125	63	62				
VE3.1/ 032 - T	●	VE3.1/ 032 - H	●				160	80	80				

✓ - Ex-stock ● - Against Order | Ordering Example: Code - Quantity | VE3.1/ 032 - T - 20 Pcs

◆ **Note**: Customised Sizes & DLC coated pins are available on request

VIJAYDEEP™

VIJAYDEEP™

VE3.1

DIN-1530

Raw Material:Through Hardened & Ground Steel
Hardness: 50-54 HRC
Recommended for Plastic moulds.
Raw Material: Hot Die Steel (H-11/H-13)
Hardness: Surface Nitrided to 60-62 HRC Core 45-50 HRC
Recommended for high temperature moulds and die casting dies.

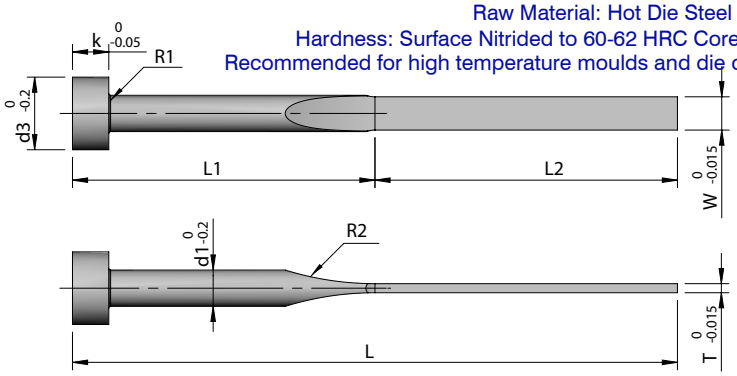

Through Hardened	Stock	Nitrided (HDS)	Stock	d1	d3	k	L	L1	L2	W	T	R1	R2
VE3.1/ 033 - T	●	VE3.1/ 033 - H	●	6	12	5	100	50	50	5.5	1.5	0.5	5
VE3.1/ 034 - T	●	VE3.1/ 034 - H	●				125	63	62				
VE3.1/ 035 - T	●	VE3.1/ 035 - H	●				160	80	80				
VE3.1/ 036 - T	●	VE3.1/ 036 - H	●				200	100	100				
VE3.1/ 037 - T	●	VE3.1/ 037 - H	●	6	12	5	125	63	62	5.5	2	0.5	5
VE3.1/ 038 - T	●	VE3.1/ 038 - H	●				160	80	80				
VE3.1/ 039 - T	●	VE3.1/ 039 - H	●				200	100	100				
VE3.1/ 040 - T	●	VE3.1/ 040 - H	●	8	14	5	100	50	50	7.5	1.2	0.5	5
VE3.1/ 041 - T	●	VE3.1/ 041 - H	●				125	63	62				
VE3.1/ 042 - T	●	VE3.1/ 042 - H	●				160	80	80				
VE3.1/ 043 - T	●	VE3.1/ 043 - H	●				200	100	100				
VE3.1/ 044 - T	●	VE3.1/ 044 - H	●	8	14	5	125	63	62	7.5	1.5	0.5	5
VE3.1/ 045 - T	●	VE3.1/ 045 - H	●				160	80	80				
VE3.1/ 046 - T	●	VE3.1/ 046 - H	●				200	100	100				
VE3.1/ 047 - T	●	VE3.1/ 047 - H	●				250	125	125				
VE3.1/ 048 - T	●	VE3.1/ 048 - H	●	8	14	5	160	80	80	7.5	2	0.5	5
VE3.1/ 049 - T	●	VE3.1/ 049 - H	●				200	100	100				
VE3.1/ 050 - T	●	VE3.1/ 050 - H	●				250	125	125				
VE3.1/ 051 - T	●	VE3.1/ 051 - H	●				315	160	155				
VE3.1/ 052 - T	●	VE3.1/ 052 - H	●	10	16	5	160	80	80	9.5	1.5	0.5	5
VE3.1/ 053 - T	●	VE3.1/ 053 - H	●				200	100	100				
VE3.1/ 054 - T	●	VE3.1/ 054 - H	●				250	125	125				
VE3.1/ 055 - T	●	VE3.1/ 055 - H	●				315	160	155				
VE3.1/ 056 - T	●	VE3.1/ 056 - H	●	10	16	5	200	100	100	9.5	2	0.5	5
VE3.1/ 057 - T	●	VE3.1/ 057 - H	●				250	125	125				
VE3.1/ 058 - T	●	VE3.1/ 058 - H	●				315	160	155				
VE3.1/ 059 - T	●	VE3.1/ 059 - H	●				400	200	200				
VE3.1/ 060 - T	●	VE3.1/ 060 - H	●	12	18	7	200	100	100	11.5	2	0.8	5
VE3.1/ 061 - T	●	VE3.1/ 061 - H	●				250	125	125				
VE3.1/ 062 - T	●	VE3.1/ 062 - H	●				315	160	155				
VE3.1/ 063 - T	●	VE3.1/ 063 - H	●				400	200	200				
VE3.1/ 064 - T	●	VE3.1/ 064 - H	●				200	100	100		2.5	0.8	10

✓ - Ex-stock ● - Against Order | Ordering Example: Code - Quantity | VE3.1/ 064 - T - 20 Pcs

◆ **Note**: Customised Sizes & DLC coated pins are available on request

VE

VIJAYDEEP™

VIJAYDEEP™

VE3.1

DIN-1530

Raw Material:Through Hardened & Ground Steel
Hardness: 50-54 HRC
Recommended for Plastic moulds.
Raw Material: Hot Die Steel (H-11/H-13)
Hardness: Surface Nitrided to 60-62 HRC Core 45-50 HRC
Recommended for high temperature moulds and die casting dies.

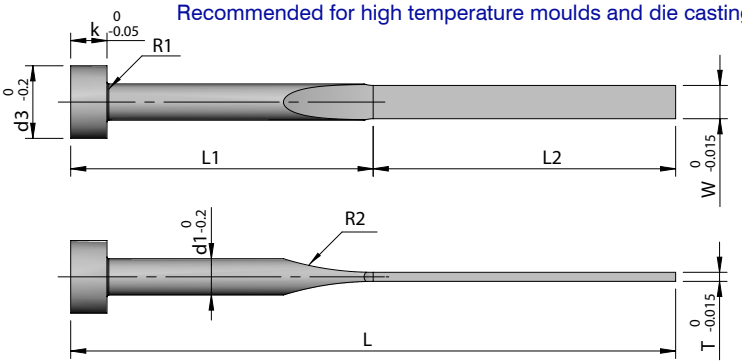

Through Hardened	Stock	Nitrided (HDS)	Stock	d1	d3	k	L	L1	L2	W	T	R1	R2
VE3.1/ 065 - T	•	VE3.1/ 065 - H	•	12	18	7	250	125	125	11.5	2.5	0.8	10
VE3.1/ 066 - T	•	VE3.1/ 066 - H	•				315	160	155				
VE3.1/ 067 - T	•	VE3.1/ 067 - H	•				400	200	200				
VE3.1/ 068 - T	•	VE3.1/ 068 - H	•	16	22	7	200	100	100	15.5	2	0.8	10
VE3.1/ 069 - T	•	VE3.1/ 069 - H	•				250	125	125				
VE3.1/ 070 - T	•	VE3.1/ 070 - H	•				315	160	155				
VE3.1/ 071 - T	•	VE3.1/ 071 - H	•				400	200	200				
VE3.1/ 072 - T	•	VE3.1/ 072 - H	•	16	22	7	200	100	100	15.5	2.5	0.8	10
VE3.1/ 073 - T	•	VE3.1/ 073 - H	•				250	125	125				
VE3.1/ 074 - T	•	VE3.1/ 074 - H	•				315	160	155				
VE3.1/ 075 - T	•	VE3.1/ 075 - H	•				400	200	200				

✓ - Ex-stock • - Against Order | Ordering Example: Code - Quantity | VE3.1/ 075 - T - 20 Pcs

◆ **Note**: Customised Sizes & DLC coated pins are available on request

VE

VIJAYDEEP™